# Components

SOURCE:
https://support.zortrax.com/m300-components/

**Table Of Contents**

Front View
Left-Side View
Right-Side View

# Front View

1 Extruder Cable
2 Material Guide
3 Extruder
4 Hotend
5 Display

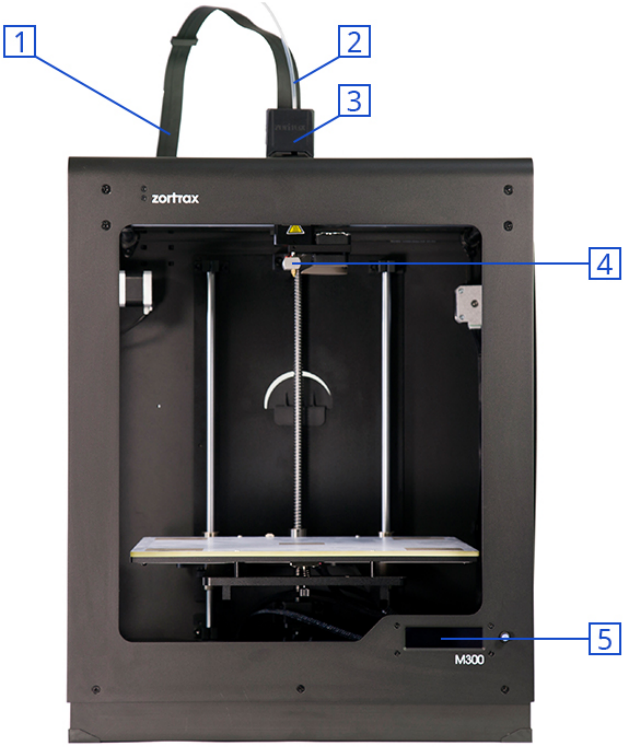

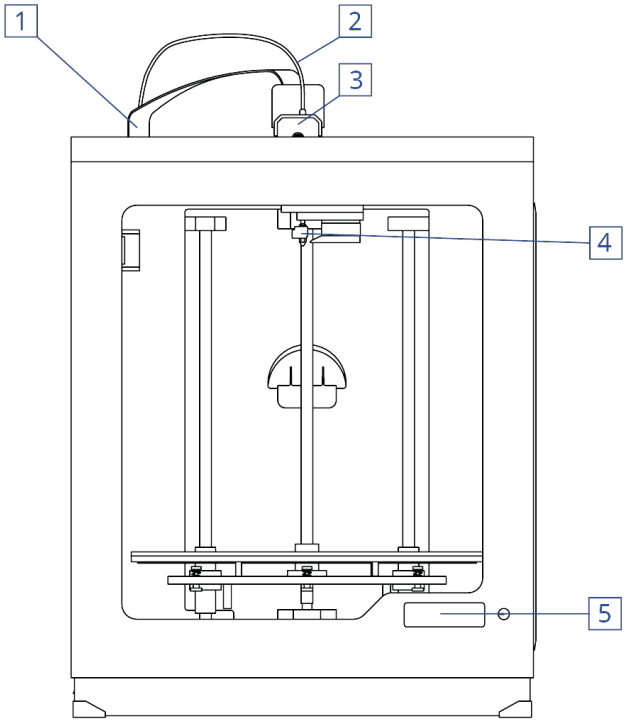
1
2
3
4
5

# Left-Side View

6 Material Spool
7 Power Connector and Switch
8 Platform

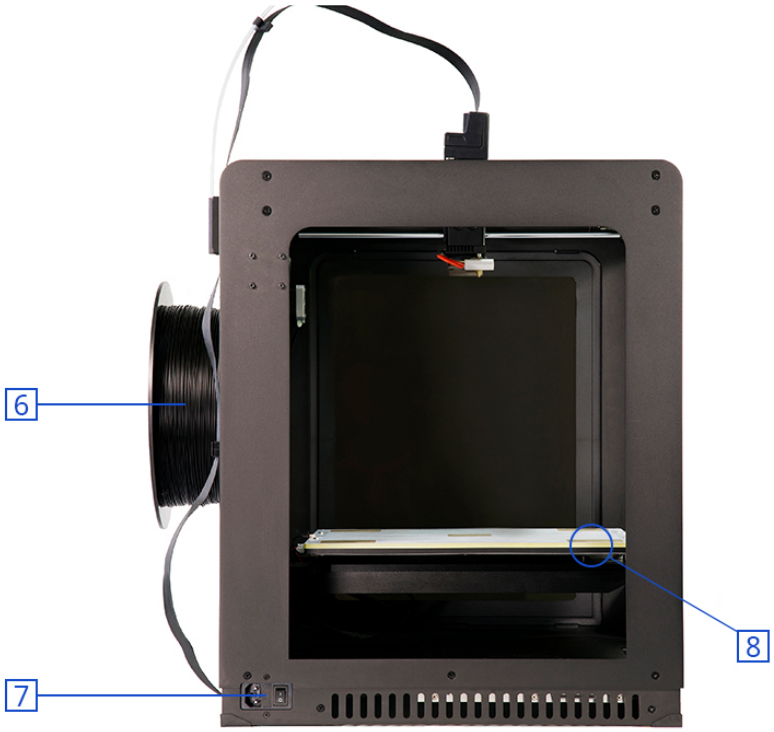


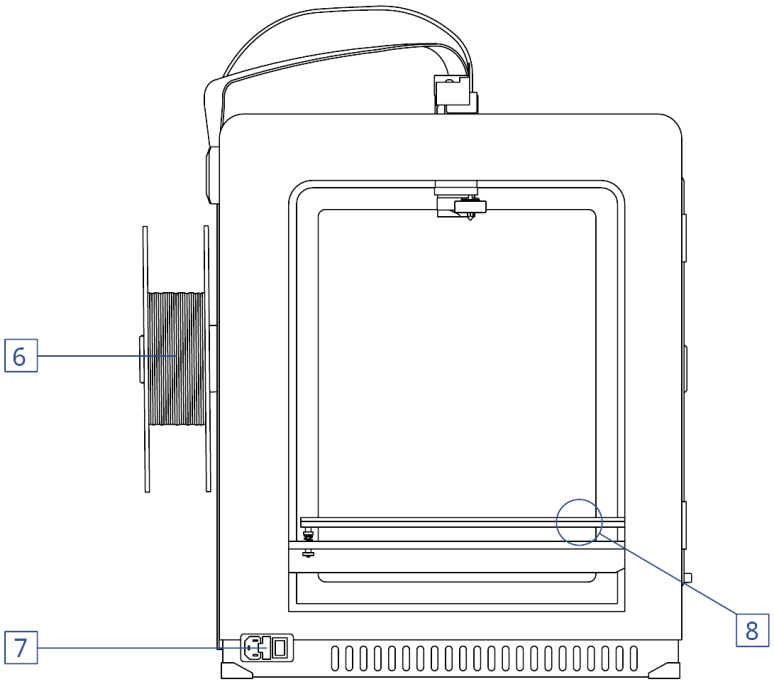

# Right-Side View
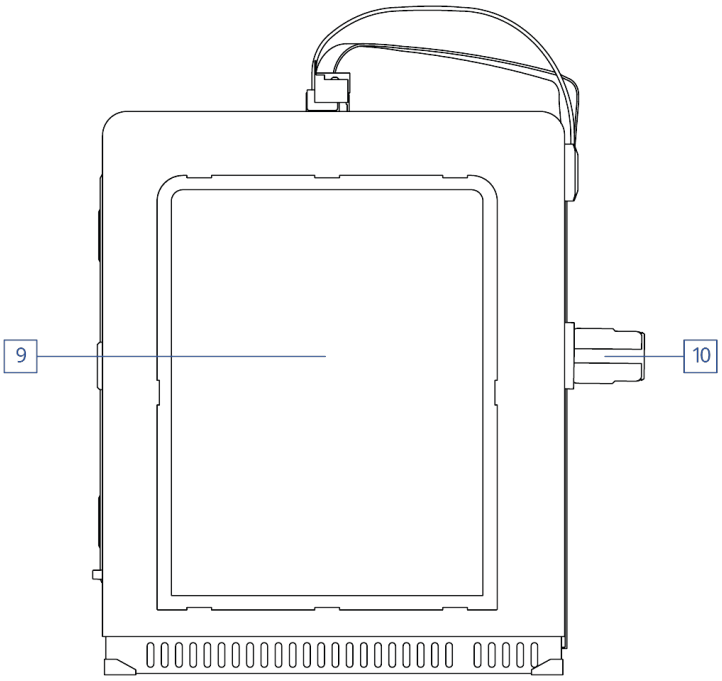
9 Side Cover
10 Spool Holder